Work Order ID 66171

Monday, February 07, 2011 11:35:06 AM

Item ID: D2530 **Accept** **Setup Start**

Revision ID: **Stop**

Item Name: Handle Weldment

Start Date: 2/8/2011 **Start Qty:** 12.00 **Cust Item ID:**

Required Date: 2/22/2011 **Req'd Qty:** 12.00 **Customer:**

Reference:

Approvals: **Process Plan:** JMF **Date:** 11-02-07 **Tooling:** _____ **Date:** _____ **Run Start**

QC: _____ **Date:** _____ **SPC (Y/N):** _____ **Date:** _____ **Stop**

Sequence ID/ Work Center ID	Operation Description	Set Up/ Run Hours	Tool ID	Tool #	Plan Code	Accept Qty	Reject Qty	Reject Number	Insp. Stamp
Draw Nbr / **Revision Nbr**									
D2530 / Rev B						12X			
100 Small Fab	Small Fab	0.00							
	Memo 1-Cut to length as per Dwg D2536 2-Deburr	0.00							
110 QC Quality Control	QC6- Inspect dimensions to drawing	0.00							
	Memo	0.00				12			
120 Large Fab	Weld per dwg A/R S.S. rod Batch: 115928 Small Fab	0.00							
	Memo 1-Weld as per Dwg D2530 and QSI 004 using Welding Jig DT8301	0.00							

11/02/17

11/02/17

PC 11.03.08

Dart Aerospace Ltd

W/O:		WORK ORDER CHANGES					
DATE	STEP	PROCEDURE CHANGE	By	Date	Qty	Approval Chief Eng / Prod Mgr	Approval QC Inspector

Part No: _____ **PAR #:** _____ **Fault Category:** _____ **NCR:** Yes No **DQA:** _____ **Date:** _____

Resolution: _____ **Disposition:** _____ **QA: N/C Closed:** _____ **Date:** _____

NCR:		WORK ORDER NON-CONFORMANCE (NCR)						
DATE	STEP	Description of NC Section A	Corrective Action Section B			Verification Section C	Approval Chief Eng	Approval QC Inspector
			Initial Chief Eng	Action Description Chief Eng	Sign & Date			

NOTE: Date & initial all entries

Work Order ID 66171

Monday, February 07, 2011 11:35:06 AM

Item ID: D2530 **Accept** **Setup Start**

Revision ID:

Item Name: Handle Weldment **Stop**

Start Date: 2/8/2011 **Start Qty:** 12.00 **Cust Item ID:**

Required Date: 2/22/2011 **Req'd Qty:** 12.00 **Customer:**

Reference:

Approvals: **Process Plan:** _____ **Date:** _____ **Tooling:** _____ **Date:** _____ **Run Start**

QC: _____ **Date:** _____ **SPC (Y/N):** _____ **Date:** _____ **Stop**

Sequence ID/ Work Center ID	Operation Description	Set Up/ Run Hours	Tool ID	Tool #	Plan Code	Accept Qty	Reject Qty	Reject Number	Insp. Stamp
130 QC Quality Control	QC9- Inspect visual per QSI004- Fusion Welds **Memo**	0.00 0.00	11·03·08			SY	11·03·08		121
140 QC Quality Control	QC5- Inspect part completeness to step on W/O **Memo**	0.00 0.00	11/03/08			112			
150 Powdercoat Powder Coating	Black Sandtex(Ref:4.3.5.7) per QSI005 4.3 M 112088 **Memo** START TIME: 1:00 OVEN TEMPERATURE: 320° FINISH TIME: 1:20	0.00 0.00				12	BK 11-3-9		

Dart Aerospace Ltd

W/O:		WORK ORDER CHANGES					
DATE	STEP	PROCEDURE CHANGE	By	Date	Qty	Approval Chief Eng / Prod Mgr	Approval QC Inspector

Part No: _____ **PAR #:** _____ **Fault Category:** _____ **NCR:** Yes No **DQA:** _____ **Date:** _____

Resolution: _____ **Disposition:** _____ **QA: N/C Closed:** _____ **Date:** _____

NCR:		WORK ORDER NON-CONFORMANCE (NCR)						
DATE	STEP	Description of NC Section A	Corrective Action Section B			Verification Section C	Approval Chief Eng	Approval QC Inspector
			Initial Chief Eng	Action Description Chief Eng	Sign & Date			

NOTE: Date & initial all entries

Work Order ID 66171

Monday, February 07, 2011 11:35:06 AM

Item ID: D2530 **Accept** **Setup Start**

Revision ID: **Stop**

Item Name: Handle Weldment

Start Date: 2/8/2011 **Start Qty:** 12.00 **Cust Item ID:**

Required Date: 2/22/2011 **Req'd Qty:** 12.00 **Customer:**

Reference:

Approvals: **Process Plan:** _____ **Date:** _____ **Tooling:** _____ **Date:** _____ **Run Start**

QC: _____ **Date:** _____ **SPC (Y/N):** _____ **Date:** _____ **Stop**

Sequence ID/ Work Center ID	Operation Description	Set Up/ Run Hours	Tool ID	Tool #	Plan Code	Accept Qty	Reject Qty	Reject Number	Insp. Stamp
160	QC3- Inspect Part Finish	0.00				12	0	90	11/03/09
QC	Memo	0.00							
Quality Control									
170	Identify as per dwg & Stock Location: 506	0.00							
Packaging	Memo	0.00							
Packaging									
180	QC21- Final Inspection - Work Order Release	0.00							
QC	Memo	0.00							
Quality Control									

11/3/10 (12)

11/3/10

11-03-10 (12)

Dart Aerospace Ltd

W/O:		WORK ORDER CHANGES					
DATE	STEP	PROCEDURE CHANGE	By	Date	Qty	Approval Chief Eng / Prod Mgr	Approval QC Inspector

Part No: _____ **PAR #:** _____ **Fault Category:** _____ **NCR:** Yes No **DQA:** _____ **Date:** _____

Resolution: _____ **Disposition:** _____ **QA: N/C Closed:** _____ **Date:** _____

NCR:		WORK ORDER NON-CONFORMANCE (NCR)						
DATE	STEP	Description of NC Section A	Corrective Action Section B			Verification Section C	Approval Chief Eng	Approval QC Inspector
			Initial Chief Eng	Action Description Chief Eng	Sign & Date			

NOTE: Date & initial all entries

Picklist Print

Monday, February 07, 2011 11:35:01 AM

Work Order ID: 66171

Parent Item: D2530

Parent Item Name: Handle Weldment

Start Date: 2/8/2011 **Required Date:** 2/22/2011

Start Qty: 12.00 **Required Qty:** 12.00

Comments: IPP Rev:E Removed Purchasing 05-11-07 JLM IPP Rev:F
11.01.07 chg qc 5 to 6 DD verf:EC

Component Item ID/ Item Name	Replacement Item ID	Mfg/ Purch	Bin Item	Primary Location	Last Location	Route Seq ID	Unit of Measure	Qty on Hand	Qty per Kit	Total Qty	Qty Issued	Date Issued	Status
D2534		Manufactured	No			120	Each	14.0000	2	24			
Lock Plate													
				Location		**Loc Qty**		**Loc Code**					
				WA020		14							
					64929	14							
M304TR0.750W.049		Purchased	No			100	f	75.3552	2.9145	36.81474			
304 RD Tube .750 x .049W													
				Location		**Loc Qty**		**Loc Code**					
				MAT		69.735195							
					108498	0							
					110113	0							
					115010	15.074255							
					116108	14.66094							
					116720	40							
				MAT014		0.00003							
					115990	0.00003							
				MAT017		5.62							
					109314	4.33							
					110113	1.29							

11.03.08

B66807 → 10

14

36.81474

11/02/17

36.81474

Dart Aerospace Ltd

W/O:		WORK ORDER CHANGES					
DATE	STEP	PROCEDURE CHANGE	By	Date	Qty	Approval Chief Eng / Prod Mgr	Approval QC Inspector

Part No: _____ **PAR #:** _____ **Fault Category:** _____ **NCR:** Yes No **DQA:** _____ **Date:** _____

Resolution: _____ **Disposition:** _____ **QA: N/C Closed:** _____ **Date:** _____

NCR:		WORK ORDER NON-CONFORMANCE (NCR)						
DATE	STEP	Description of NC Section A	Corrective Action Section B			Verification Section C	Approval Chief Eng	Approval QC Inspector
			Initial Chief Eng	Action Description Chief Eng	Sign & Date			

NOTE: Date & initial all entries

DESIGN	DRAWN BY	DART AEROSPACE LTD VICTORIA INTERNATIONAL AIRPORT, CANADA
B WILLIAMS	PH	
CHECKED	APPROVED	DRAWING NO. D2530 — REV. B — SHEET 1 OF 1
DATE 04.12.14		TITLE HANDLE WELDMENT — SCALE

A	96.06.18	NEW ISSUE
B	04.12.14	UPDATE NOTES AND DIMENSIONS

RELEASED
04.12.16

PART LIST -- D2530

QTY	PART NUMBER	DESCRIPTION
X	D2530	HANDLE WELDMENT
1	D2536	HANDLE
2	D2534	LOCK PLATE

66171

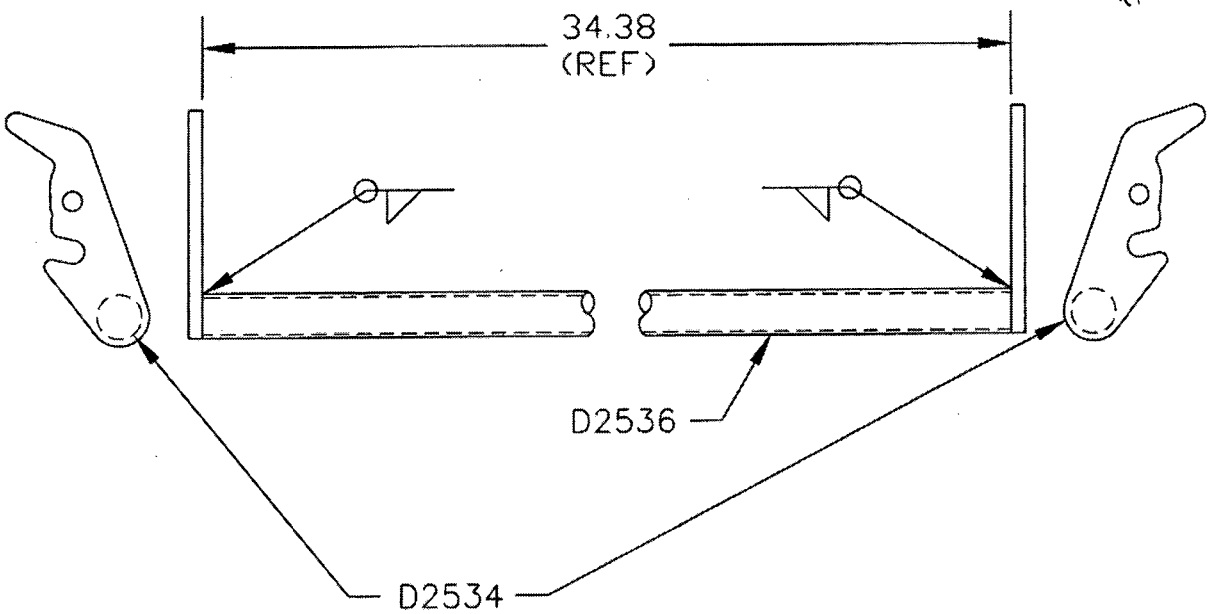

D2530 HANDLE WELDMENT

1) WELD PER DART QSI 004
2) FINISH: POWDER COAT BLACK (4.3.5.7) PER DART QSI 005 4.3
3) ALL DIMENSIONS ARE IN INCHES
4) ALL TOLERANCES ARE PER DART QSI 018 UNLESS OTHERWISE NOTED

Copyright 1996 by DART AEROSPACE LTD

Dart Aerospace Ltd

W/O:		WORK ORDER CHANGES					
DATE	STEP	PROCEDURE CHANGE	By	Date	Qty	Approval Chief Eng / Prod Mgr	Approval QC Inspector

Part No: _____ **PAR #:** _____ **Fault Category:** _____ **NCR:** Yes No **DQA:** _____ **Date:** _____

Resolution: _____ **Disposition:** _____ **QA: N/C Closed:** _____ **Date:** _____

NCR:		WORK ORDER NON-CONFORMANCE (NCR)						
DATE	STEP	Description of NC Section A	Corrective Action Section B			Verification Section C	Approval Chief Eng	Approval QC Inspector
			Initial Chief Eng	Action Description Chief Eng	Sign & Date			

NOTE: Date & initial all entries

H:\fFORMS\Quality Assurance\approved QA\NCRWO RevE